SYSTEM WIRING DIAGRAMS
Passlock Circuit
1997 Chevrolet Cavalier
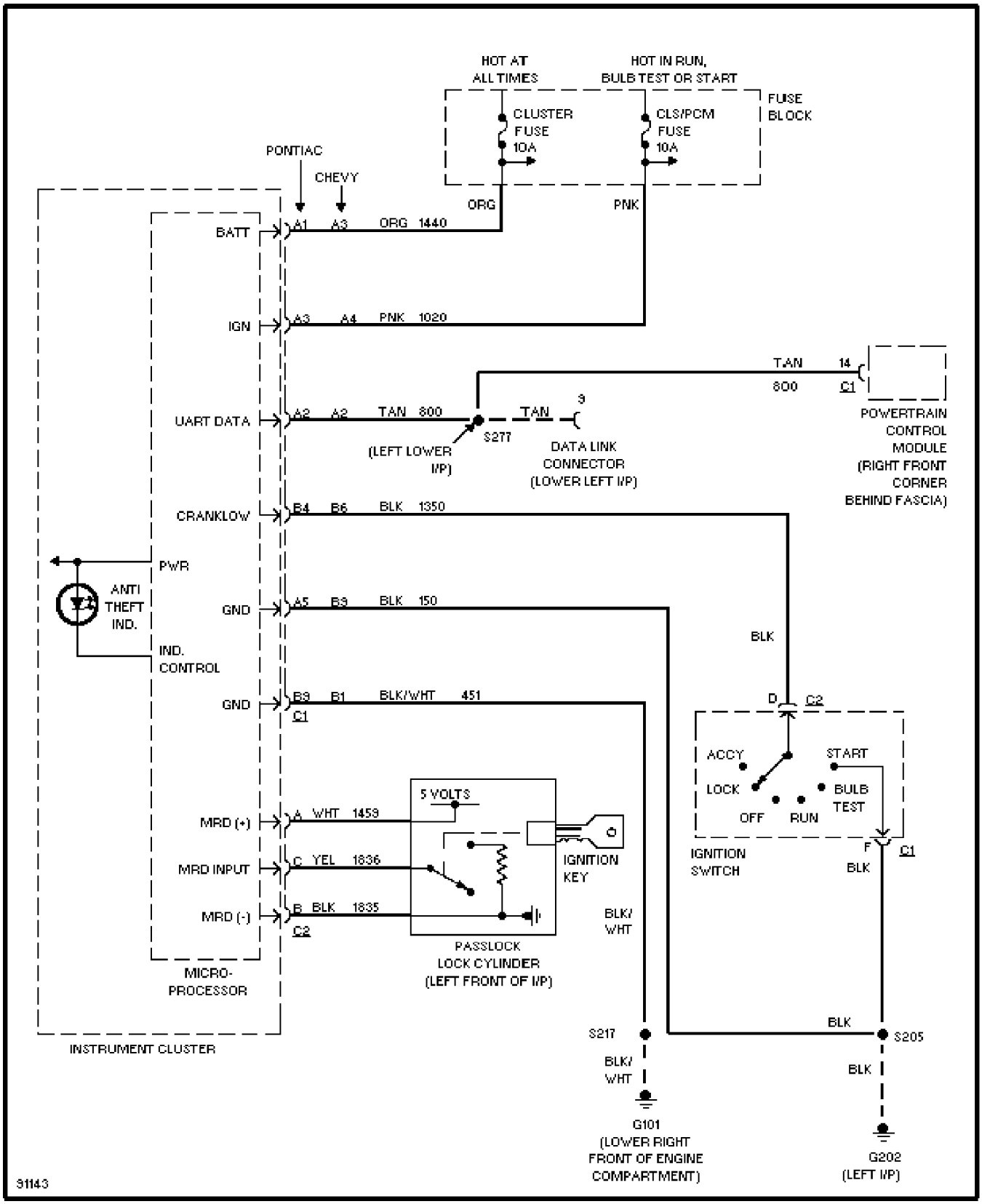
Copyright © 1998 Mitchell Repair Information Company, LLC
Monday, December 11, 2000 01:28PM